Anti-lock Braking System

Laboratory model of braking control

Installation manual

Version PCI

inteco@inteco.com.pl

NOTES

SAFETY OF THE EQUIPMENT

The equipment, when used in accordance with the supplied instructions, within the parameter set for its mechanical and electrical performance, should not cause any danger to health or safety if normal engineering applications are observed.

If, in specific cases, circumstances exist in which a potential hazard may be brought about by careless or improper use, these will be pointed out and the necessary precautions emphasised.

Some National Directives require to indicate on our equipment certain warnings that require attention by the user. These have been indicated in the specified way by labels. The meaning of any labels that may be fixed to the equipment instrument are explained in this manual.

Risk of electric shock

PRODUCT IMPROVEMENTS

The Producer reserves a right to improve design and performance of the product without prior notice.

All major changes are incorporated into up-dated editions of manuals and this manual is believed to be correct at the time of printing. However, some product changes which do not affect the capability of the equipment, may not be included until it is necessary to incorporate other significant changes.

ELECTROMAGNETIC COMPABILITY

This equipment, when operated in accordance with the supplied documentation, does not cause electromagnetic disturbance outside its immediate electromagnetic environment.

COPYRIGHT NOTICE

© Inteco Limited
All rights reserved. No part of this manual may be reproduced, stored in a retrieval system, or transmitted, in any form or by any means, electronic, mechanical, photocopying, recording or otherwise, without the prior permission of Inteco Ltd.

ACKNOWLEDGEMENTS

Inteco Ltd acknowledges all trademarks.
IBM, IBM - PC are registered trademarks of International Business Machines.
MICROSOFT, WINDOWS are registered trademarks of Microsoft Corporation.
MATLAB and Simulink are registered trademarks of Mathworks Inc.

CONTENTS

1. INTRODUCTION 6

2. COMPONENTS OF THE SYSTEM 7

3. UNPACKING AND CHECKING THE ITEMS 8

4. RT-DAC BOARD INSTALLATION 10

4.1 RT-DAC/PCI board connectors 11

4.2 Driver Installation 12

5. SOFTWARE INSTALLATION 13

6. CONNECTING THE POWER INTERFACE 17

7. STARTING AND TESTING 19

8. OPERATION AND SECURITY NOTES 20

1. INTRODUCTION

This manual contains a description of the components of the ABS System, installation instructions and test procedures. The procedures described in this manual assure the correct:

- cable connections between the ABS, ABS Power Interface and PC,
- RT-DAC/PCI-D interface board installation,
- proper operation of the encoders, Power Interface unit and DC motors.

2. COMPONENTS OF THE SYSTEM

To use the ABS system the following software and hardware components are required:

Hardware

- Pentium or AMD based personal computer
- Inteco ABS set-up consisting of ABS Mechanical Unit and ABS Power Interface Unit,
- RT-DAC/PCI Programmable Input/Output board to be installed in the PC,

Software

- Microsoft Windows XP/W7x86 and MATLAB 32 bit with Simulink, RTW and Simulink Coder (RTWT) toolboxes (not included),

or

- Microsoft Windows XP/W7x64 and MATLAB 64 bit with Simulink, RTW and Simulink Coder (RTWT) toolboxes (not included),

and

- ABS Control/Simulation Toolbox operating in MATLAB®/Simulink® environment
- TCP/IP protocol must be installed in the computer system,

Manuals

- *Installation Manual*
- *User's Manual*

Details of the required software are available at:

http://www.inteco.com.pl/support/Software_requirements.pdf

3. UNPACKING AND CHECKING THE ITEMS

Carefully unpack the items, and remove all packaging and securing material. There are the following items (Fig.3.1):

- ABS Mechanical Unit with the ribbon signal cables and power cables, attached,
- ABS Power Interface,
- Emergency switch,
- Main power cable,
- RT-DAC/PCI-D board with the ribbon cable,
- Documentation,
- CD-ROM.

The exact specification you find on the *Item List*. If any item is missed or damaged please, contact *Inteco*.

⇨ **Carefully follow the installation steps described below. Only the correct installation procedure ensures proper operation of the system.**

Fig 3.1 The ABS set-up

4. RT-DAC BOARD INSTALLATION

The RT-DAC/PCI-D board contains sensitive electric components, which can be easily damaged by static electricity, therefore the board should be kept in its original packing until it is installed. During installation the board should be handled carefully only by the edges to avoid static electricity discharge

To install the board:

- Turn off the computer and remove the cover.
- Find an empty expansion slot, remove the metal bracket,
- Insert the RT-DAC/PCI board into the expansion slot, then secure the board with the screw,
- Connect 20-way ribbon cable to CN1 connector of the board (see Fig.4.1),
- Connect the 20-way cable to Power Interface,
- Replace the cover of the computer.
-

How to connect the cables to the ABS Power Interface (Fig.4.2) is shown below.

Before removing the cover turn OFF the computer and disconnect the mains cable

4.1 RT-DAC/PCI BOARD CONNECTORS

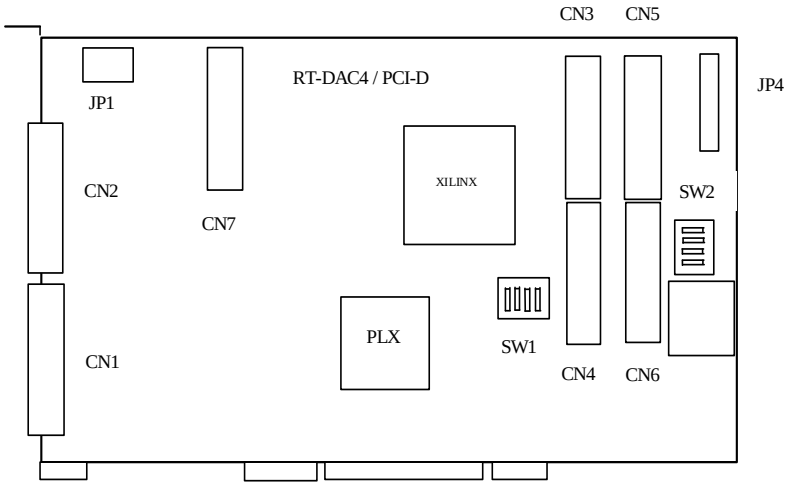

Fig. 4.1. RT-DAC/PCI-D board and location of CN1 connector

Fig. 4.2 shows connection the ribbon cable to the RT-DAC/PCI interface board.

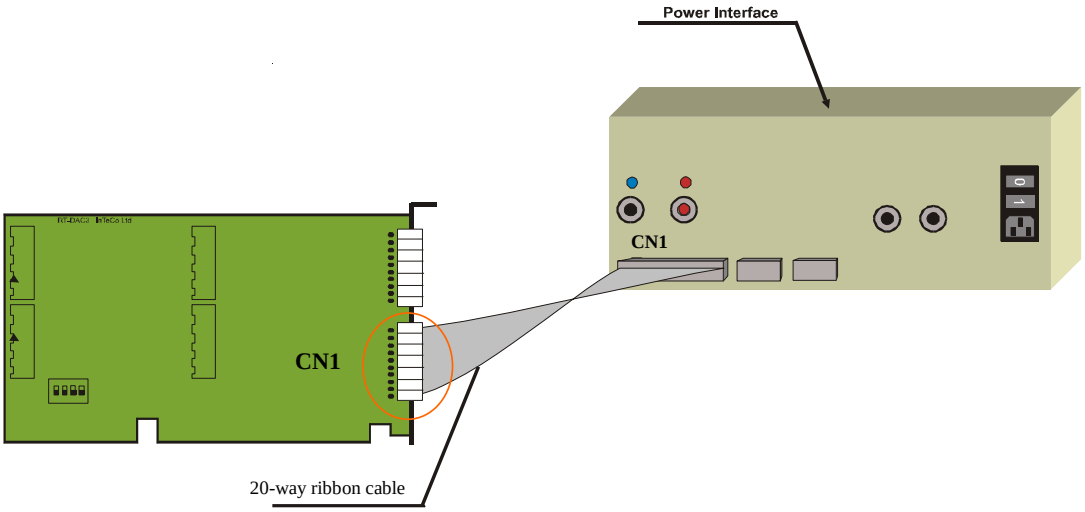

Fig.4.2. RT-DAC/PCI ribbon cable connection

4.2 DRIVER INSTALLATION

The driver for RTDAC/PCI board has to be installed because the board is of the PCI type. Administrator privileges are required for driver installation.

- Start Windows
- System detects *new PCI device*
- Select Next, then Display a list....
- Select Other Devices, then Next
- Select Have a disk, then Browse
- Select CD:\driver\directory related to your OS\RTDAC4_PCI9030.inf, then *Open*
- Select *OK* and *Next*, and *Next*
- Select *Finish*
- If Windows propose to restart the computer select *Yes*.

5. SOFTWARE INSTALLATION

The installation program has to be started by the system administrator.

To start the installation program insert the CD into the drive, and run *manager.exe* stored in the main directory. The following window (Fig. 5.1) opens.

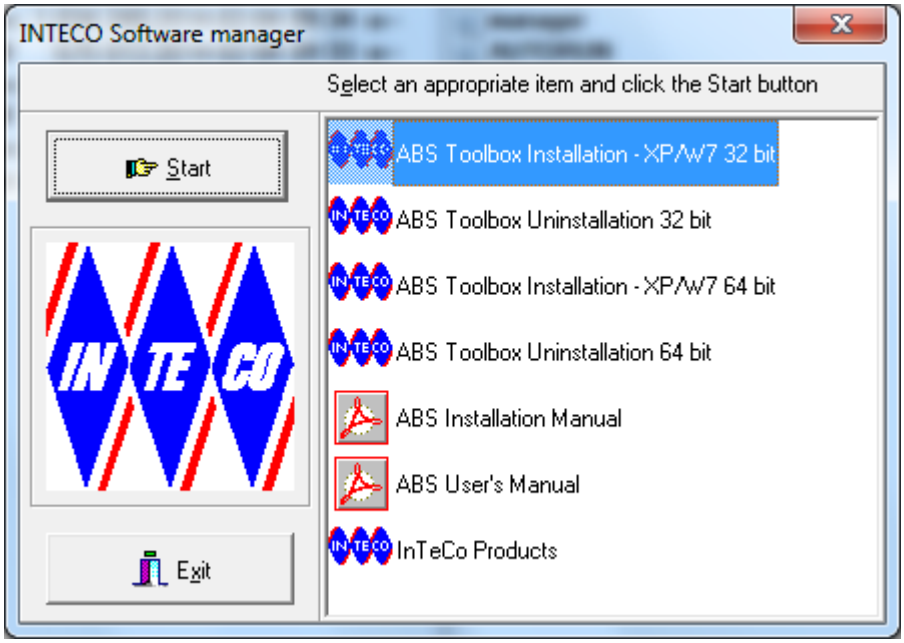

Fig. 5.1

Click *ABS Toolbox installation* to start the installation program, or *EXIT* to quit.

If you select the *START* option you see the license information. Read the license agreement carefully. If you accept the license terms mark the checkbox and click the *Next* button.

The window that appears asks you for your name and the name of your company (Fig.5.2).

Fig.5.2

If you click the *Next* button you see in this window the appropriate MATLAB version to be selected. Select your MATLAB version (Fig. 5.3). You will be informed about the version of your Windows system.

Next, the MATLAB directory has to be selected. Click the *Browse* button and find the directory (see Fig.5.4).

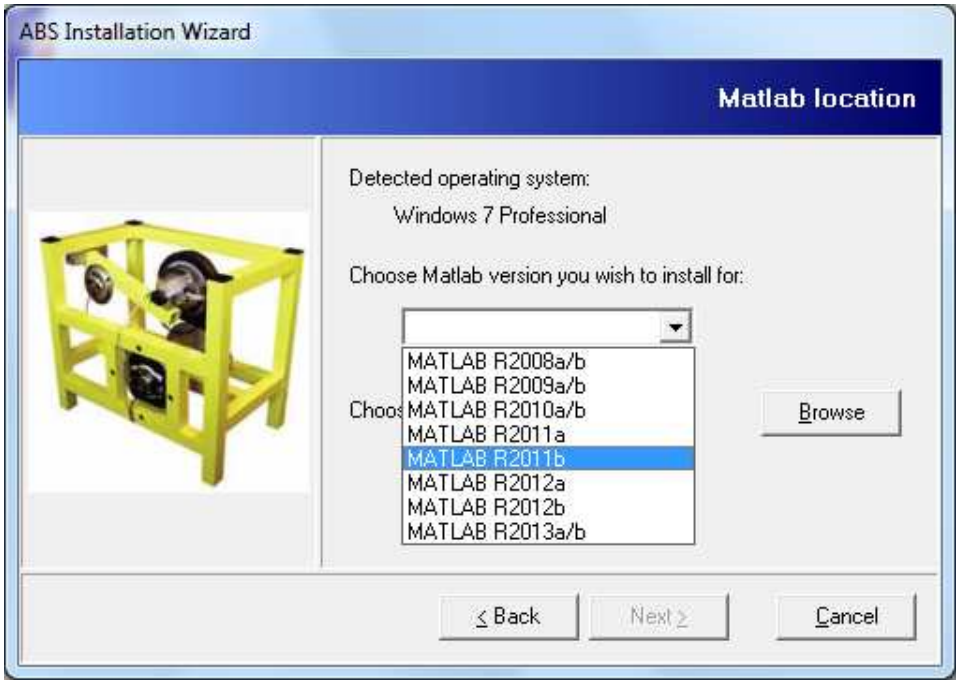

Fig. 5.3

The program automatically closes the dialogue window and the selected location is displayed in the *Matlab location* window

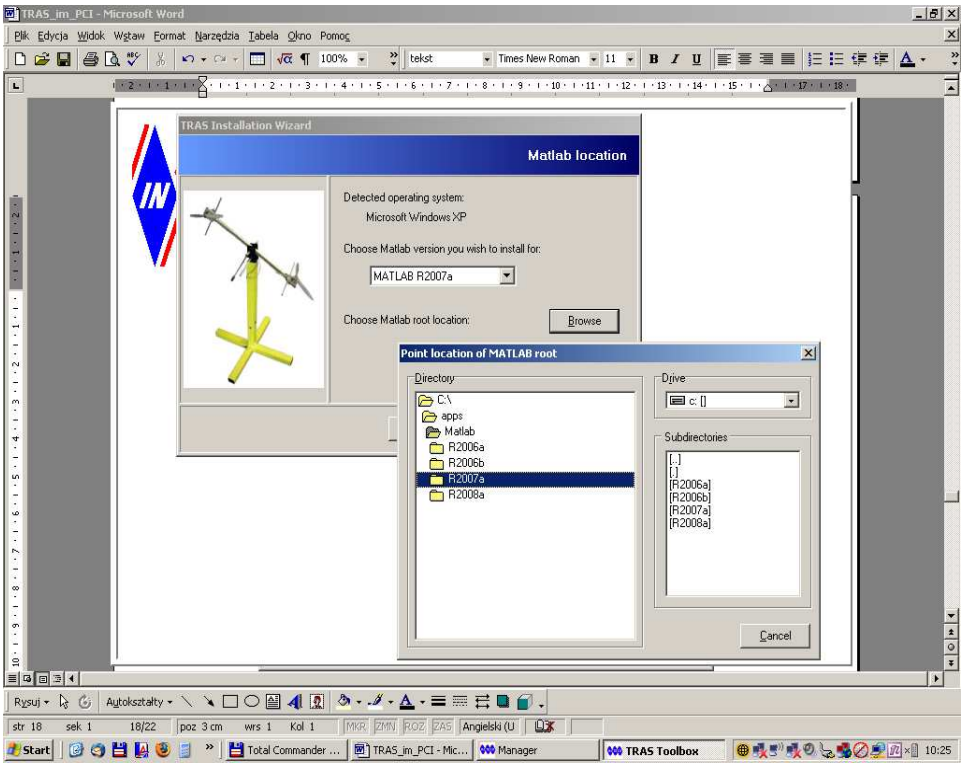

Fig. 5.4

If you have completed installation settings click the *Next* button to start the installation procedure. You will see the progress window, containing information about installation progress and names of files currently being copied.

At the end of the installation process click the *OK* button to finish.

Fig. 5.5 Restarting the system

For the Windows 2000/XP the program installs the Windows NT kernel-mode device driver. This action is performed only if the driver does not exist in the system. The application copies the driver to your system and modifies the system settings. Then, you are asked to restart your system (Fig.5.5). Click the *OK* button to restart your system.

To uninstall the software select the appropriate option in the *Software Manager* window. Uninstalling process will be performed automatically.

6. CONNECTING THE POWER INTERFACE

The general diagram of power interface connections is given in Fig. 6.1.

Before connecting the cables turn OFF the computer

There are two kinds of cables attached to the mechanical unit: one ribbon cable from the encoders and two round cables controlling the motor and the brake. The cables have the different plugs what eliminates wrong connections.

In order to connect cables go through the following steps:

- Check the position of the Mains Switch– it must be in the „0" (OFF) position.
- Connect the cables:

⇒ plug the 20-way ribbon cable from the RT-DAC/PCI board into the CN1 socket,

⇒ plug 10-way ribbon cable from the encoders into the connector Enc.

- Connect three round cables: controlling DC motors (**red marked**), respectively: to the **M socket**, controlling the brake **(green marked**) to the **B socket**,
- Connect the emergency switch cable (**black marked**) to the **Em socket**,
- Connect the mains power cable (MS) to the socket in the right upper corner of the front panel.

Notice, that the cables are clearly marked using the convention shown in Fig. 6.1

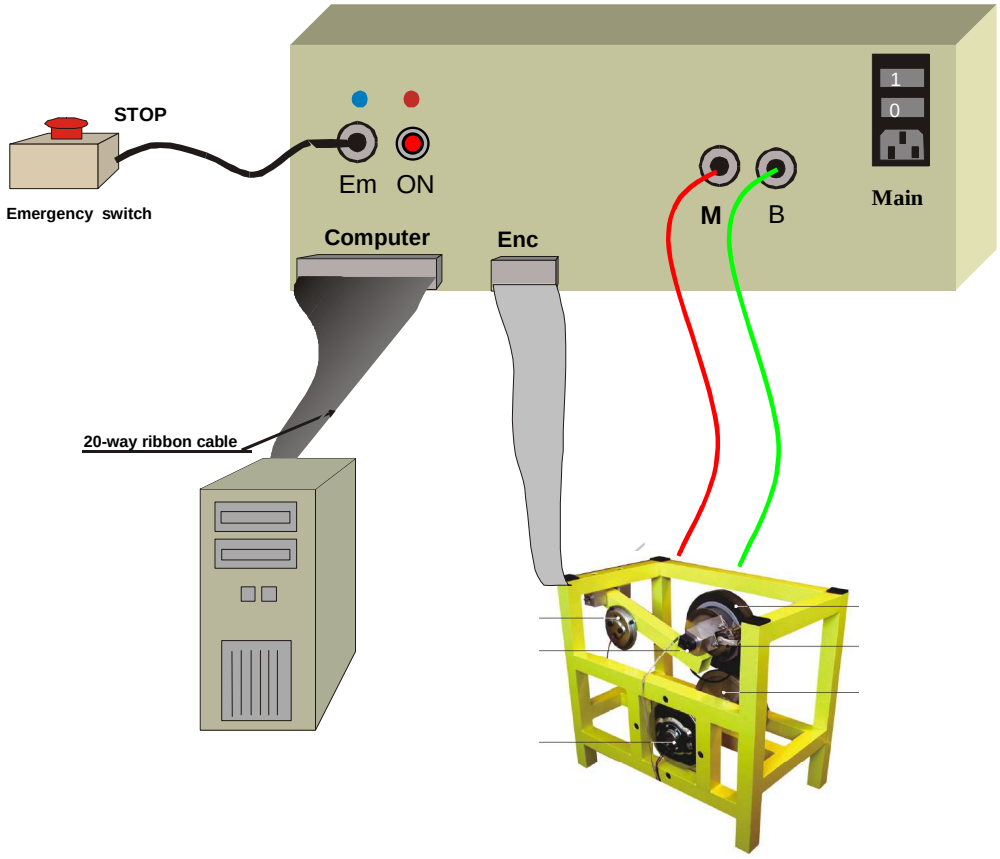

Fig. 6.1 Power Interface and connecting cables

7. STARTING AND TESTING

For safety reasons it is not allowed to start the system if the plastic security cover is removed.

In order to test the Power Interface perform the following steps:

- Install the the *ABS Testing & Control* software. For this purpose refer to *User's Manual*,
- If the RT-DAC/PCI board has been properly installed and ribbon cables have been connected turn on your PC,
- Start MATLAB and type *abs_main* command,
- Switch on the mains (Main, 220V),
- Blue LED on the front panel is "on",
- Switch on the power (ON),
- Red LED on the front panel is "on",
- Run the *Manual Setup* application to perform the test, described in the section *Starting, testing and stopping procedures* at *Getting Started Manual*, to check connections of the sensors to the Power Interface.
- In the case of any unexpected behaviour of the system use the EMERGENCY SWITCH. After using the emergency switch, you have to turn and press switch and press the P button in order to start the system again.
- You are ready now to perform your own experiments
- If your experiments are finished stop the MATLAB application. Switch off the mains (MS).

8. OPERATION AND SECURITY NOTES

- It is not allowed to start the system if the plastic security cover is removed,
- Please notice that the system is equipped with the hydraulic brake. Do not remove any connecting pipes to avoid the hydraulic liquid leak,
- Allow a good air circulation around the power interface box for the correct cooling of the radiator,
- Overheat of the power interface results in the automatic switch-off of the power. In such a case you have to repeat the starting procedure. Please wait half a minute or longer.
-

Inteco reserves the right to do changes without obligation to notify anyone of such revision or change